REV: E

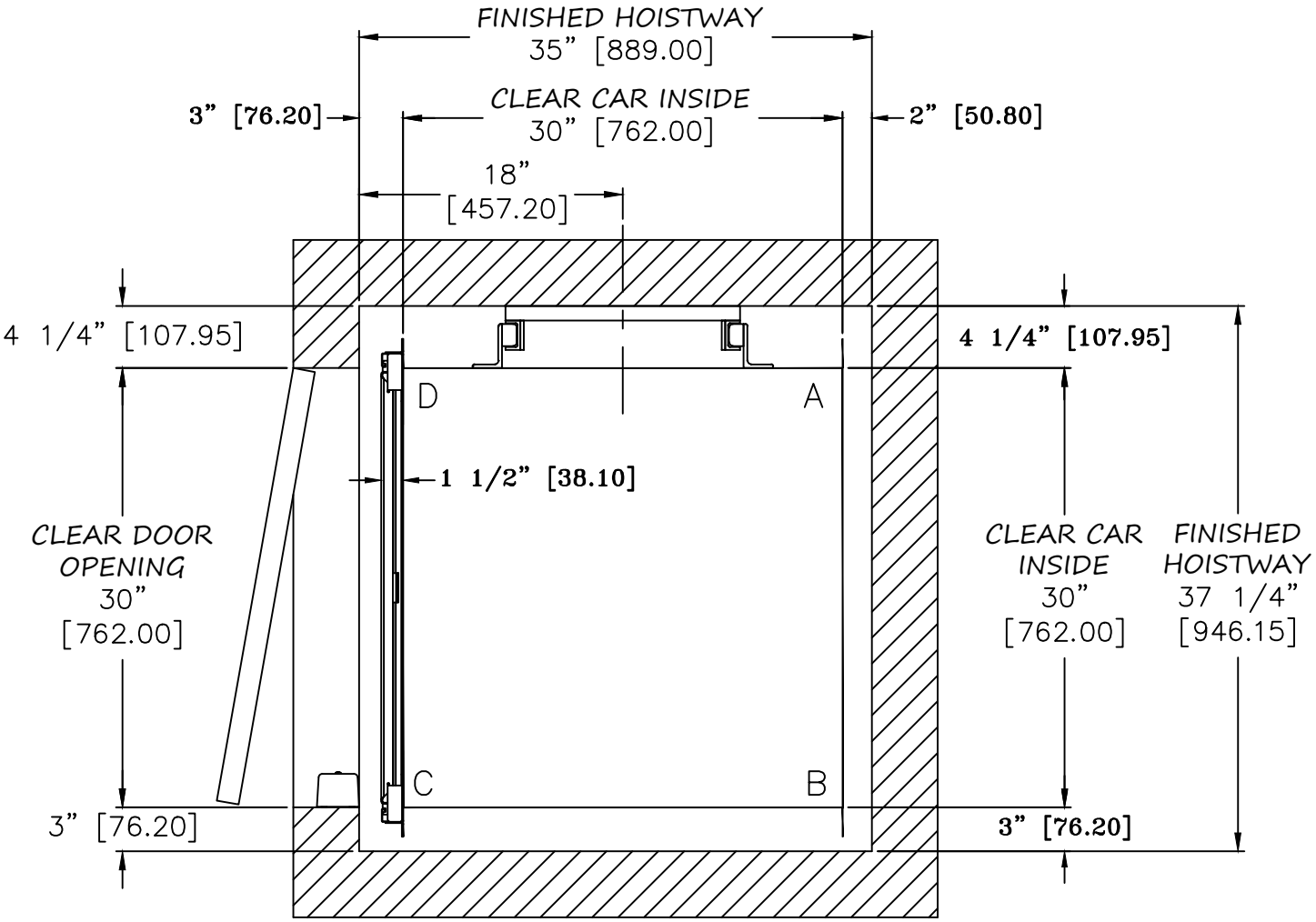

NOTE:
ALL DIMENSIONS ARE IN INCHES.
DIMENSIONS IN [ ] ARE MM.

FOX VALLEY ELEVATOR™
1726 North Ballard Road
Appleton, WI 54911
Phone: 800-238-8739

ELEVATOR CONTRACTOR:

JOB NAME: | ORDER NUMBER:

PACA-WAITER SERIES
300 LB. (136 KG) CAPACITY DUMBWAITER
DC OPENING W/ GATE

DRAWN BY:	DATE:	SIGNATURE OF APPROVAL	DWG. NO.
			C-001228