REV: E

NOTE:
1) DISTANCE BETWEEN THE FACE OF THE HOISTWAY DOOR AND EDGE OF LANDING SILL SHALL NOT EXCEED 3/4".

2) MUST REJECT 4" DIAMETER BALL AT ALL POINTS WHEN HOISTWAY DOOR AND CAR DOOR ARE IN FULLY CLOSED POSITION.

3) HOISTWAY BY OTHERS PER CODE. WALLS TO BE PLUMB AND SQUARE. ALL HOISTWAY DOORS BY OTHERS PER CODE.

4) HOISTWAY DOOR INTERLOCKS BY OTHERS.

5) FINISHED HOISTWAY = ROUGH FRAMING + DRYWALL + PLASTER + PAINT.

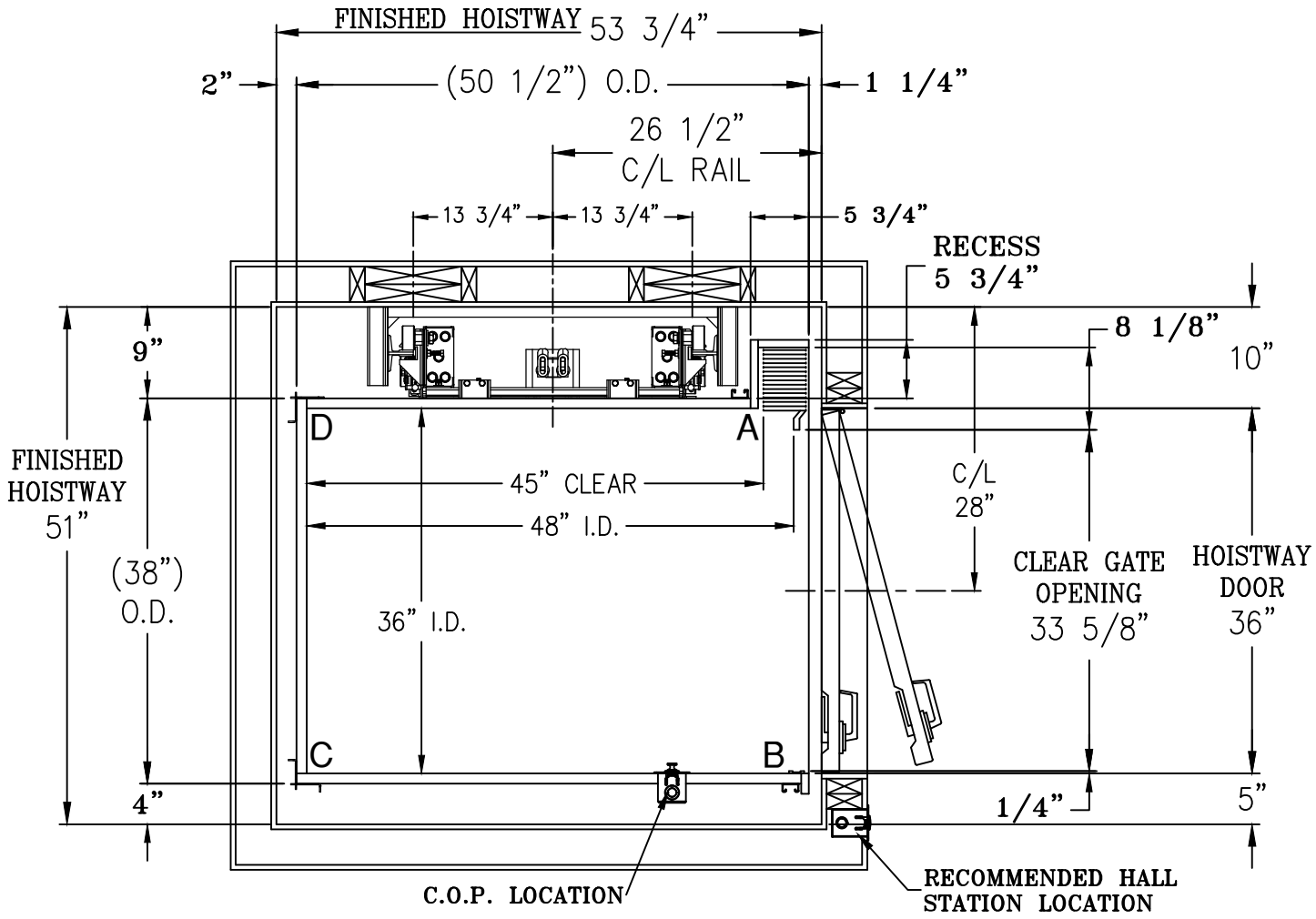

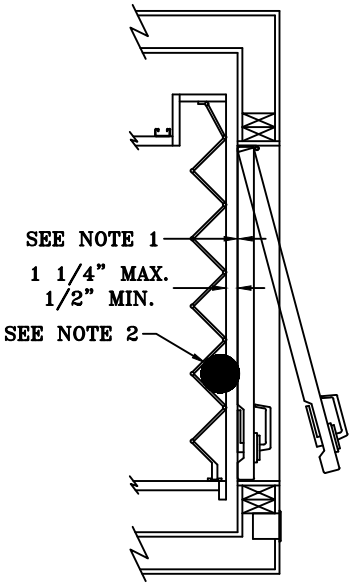

FOX VALLEY ELEVATOR™

1726 North Ballard Road
Appleton, WI 54911
Phone: 800-238-8739

ELEVATOR CONTRACTOR:

JOB NAME: | ORDER NUMBER:

EXCELEVATOR SERIES
WINDING DRUM ELEVATOR
ABR OPENING W/ ACCORDION GATE

DRAWN BY:	DATE:	SIGNATURE OF APPROVAL	DWG. NO.
			C-002850